BACON SLICER FEEDING SYSTEM

PrimeSlice™
COZZINI/ANCO SLICING TECHNOLOGIES

BACON SLICER FEEDING SYSTEM

- Compact unit integrates into existing bacon slicing lines.
- Adaptable to production lines where bellies are pressed and returned to refrigerated storage or where bellies are sent to the slicer directly from the press.
- Your choice of pneumatic or PLC controls.
- Simple, rugged design for years of reliable service.
- Labor saving addition to your bacon process line.
- USDA accepted and CE approved. Built in conformity with AMI sanitary equipment design principles.

BACON SLICER FEEDING SYSTEM

A significant productivity boost to today's exact-weight, bulk and bacon slicing lines, the Cozzini bacon feeding system allows a single operator to continuously feed up to four slicing lines. Reduces human labor, product handling and production costs.

Tempered, pressed and ready-to-slice bacon is loaded into the magazine of the feeder. The magazine automatically dispenses bacon bellies, one at a time. Once a bacon belly is loaded to the slicer, a sensor arm sends a signal for the next belly to be discharged onto the infeed conveyor.

Thanks to the bacon feeder's efficiency, a single person can operate bacon feeders on four separate, high-speed slicing lines.

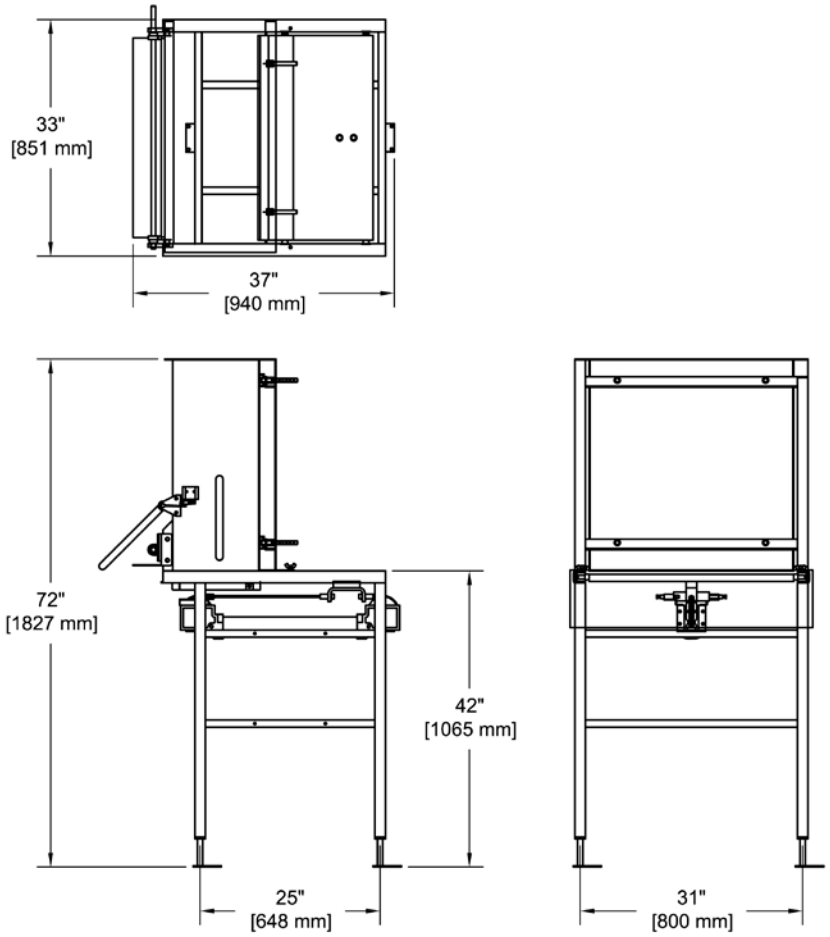

BACON SLICER FEEDING SYSTEM				
Voltage	*hp*	*kW*	*Service Amps*	*Pneumatic system*
120 V	N/A	N/A	5 A	85 psi (5.9 bar)

10/09 E

COZZINIGROUP
COMPLETE FOOD EQUIPMENT SOLUTIONS
WORLD HEADQUARTERS Cozzini, Inc.
4300 West Bryn Mawr Avenue Chicago, IL 60646-5943 U.S.A
WORLD REPRESENTATION • 773 478-9700 • www.cozzini.com • sales@cozzini.com